LED BOX PRO

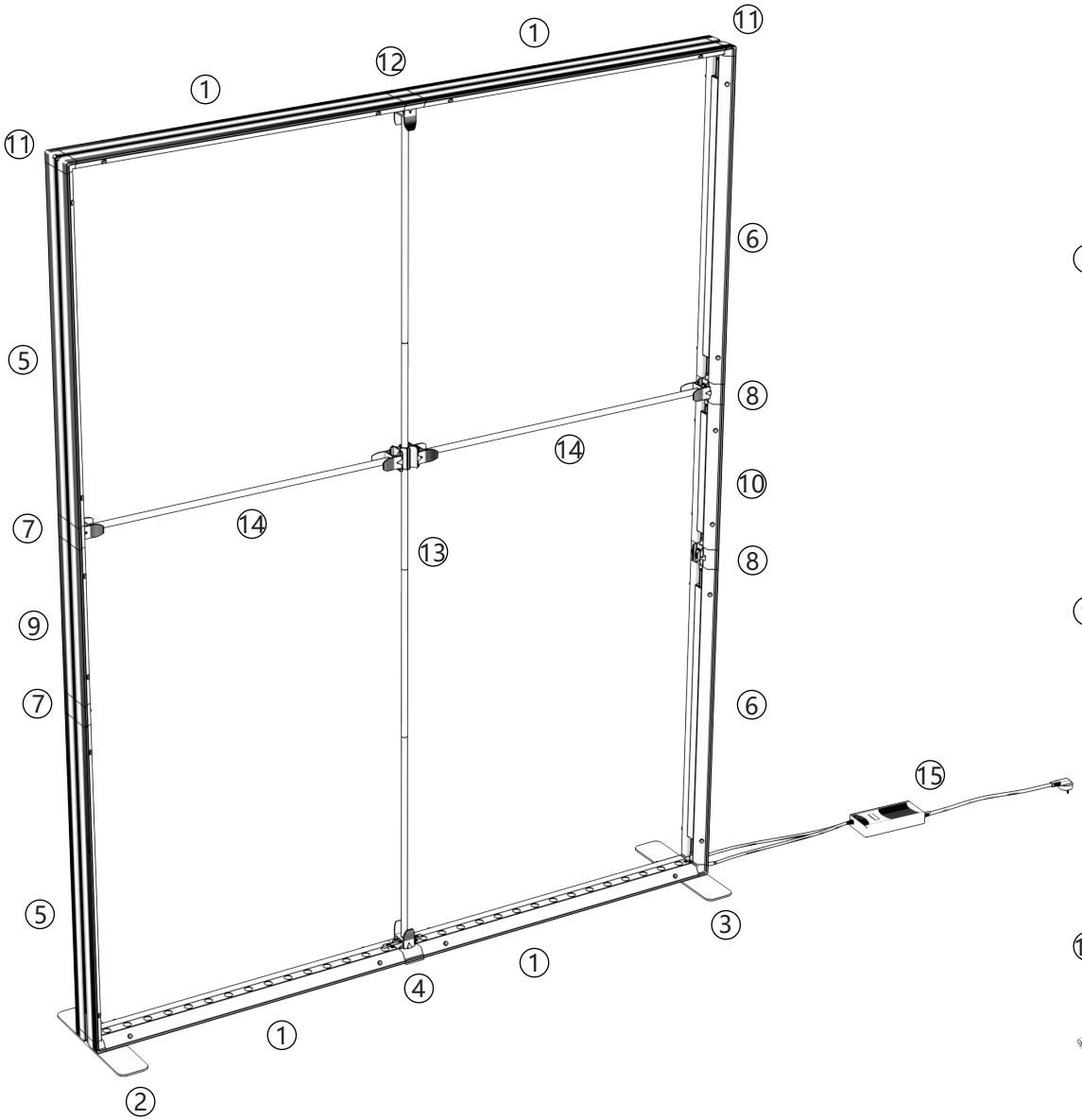

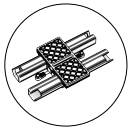

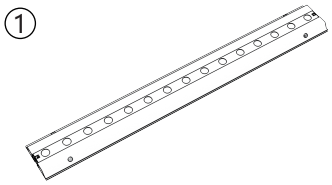

① LED light bar assembly x 4

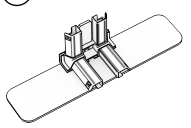

② Base feet x 1

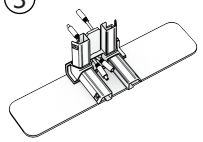

③ Base feet with DC lines x 1

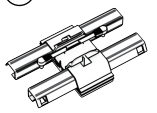

④ Horizontal Middle connector with feet mat x 1

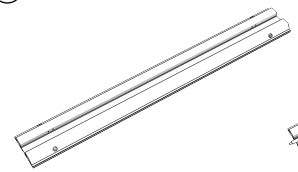

⑤ Upright assembly x 2

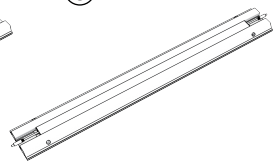

⑥ Power-side upright assembly x 2

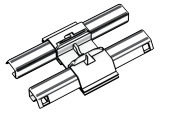

⑦ Upright connector × 2

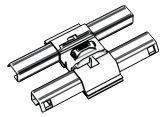

⑧ Power-side upright connector × 2

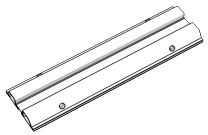

⑨ Extension pole assembly x 1

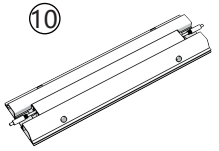

⑩ Power-side extension pole assembly x 1

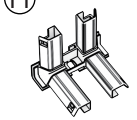

⑪ Corner connector x 2

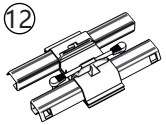

⑫ Horizontal Middle connector x 1

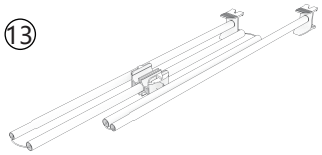

⑬ Vertical support bar assembly x 1

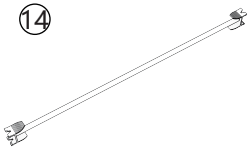

⑭ Horizontal support bar assembly x 2



⑮ Power cable x 1

Product size:2000*2500mm

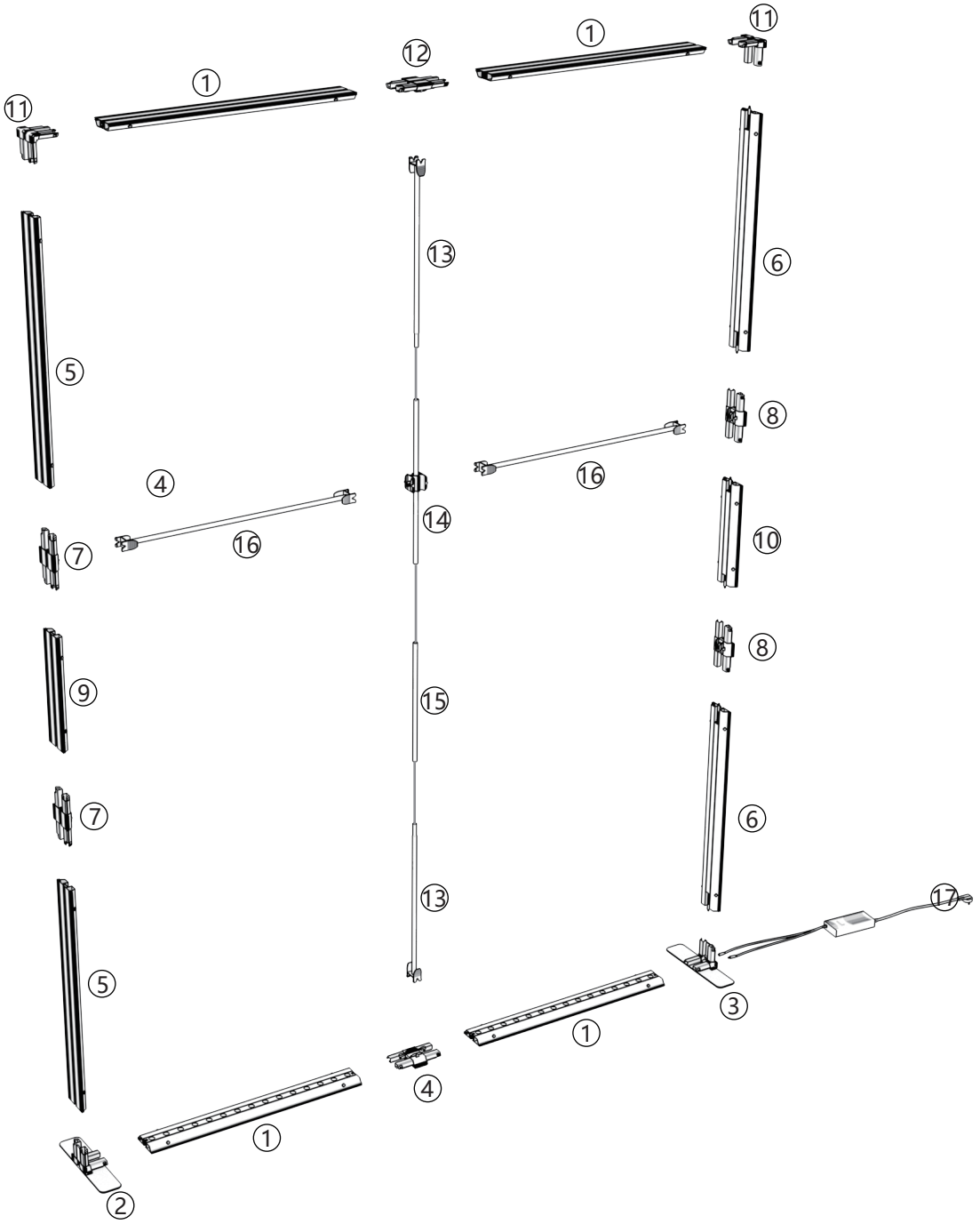

Step 1

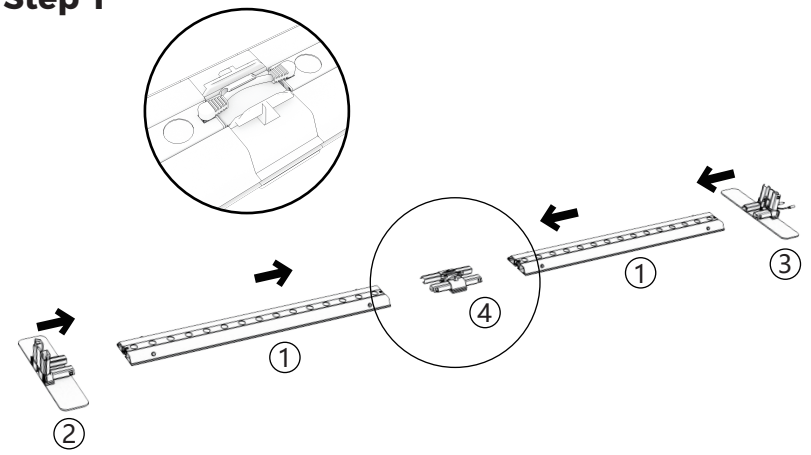

Step 2

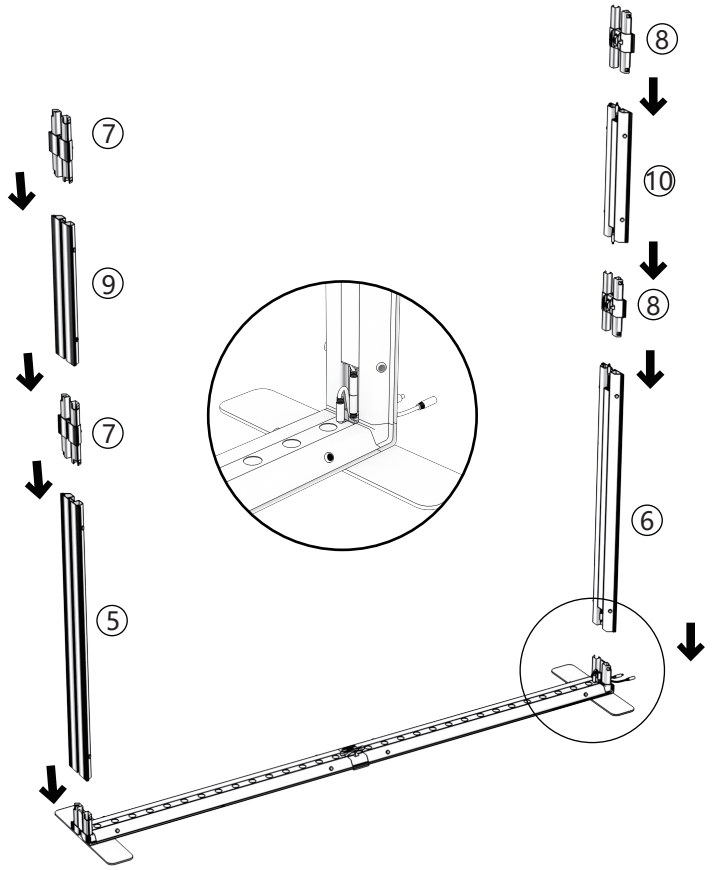

Step 3

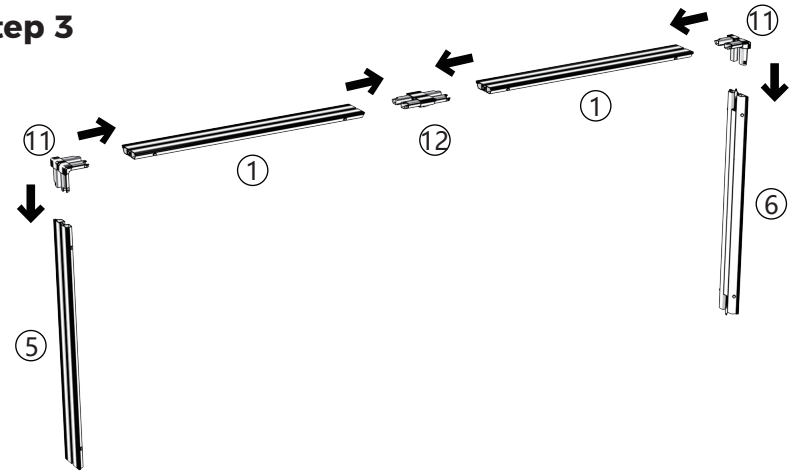

Step 4

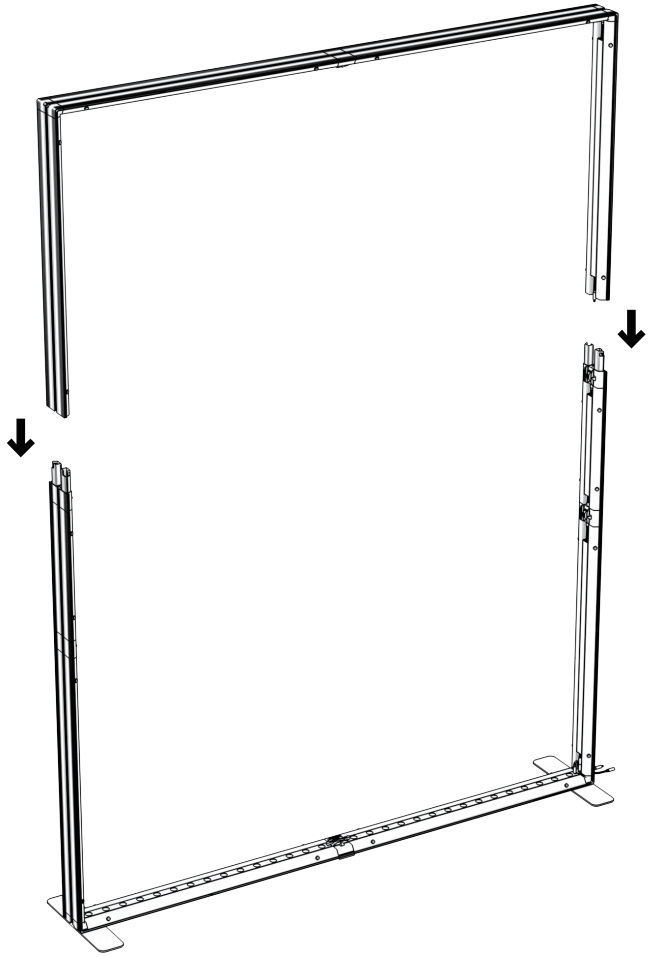

Step 5

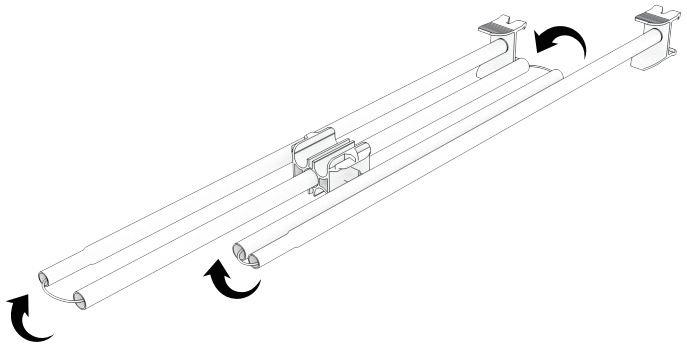

Step 6

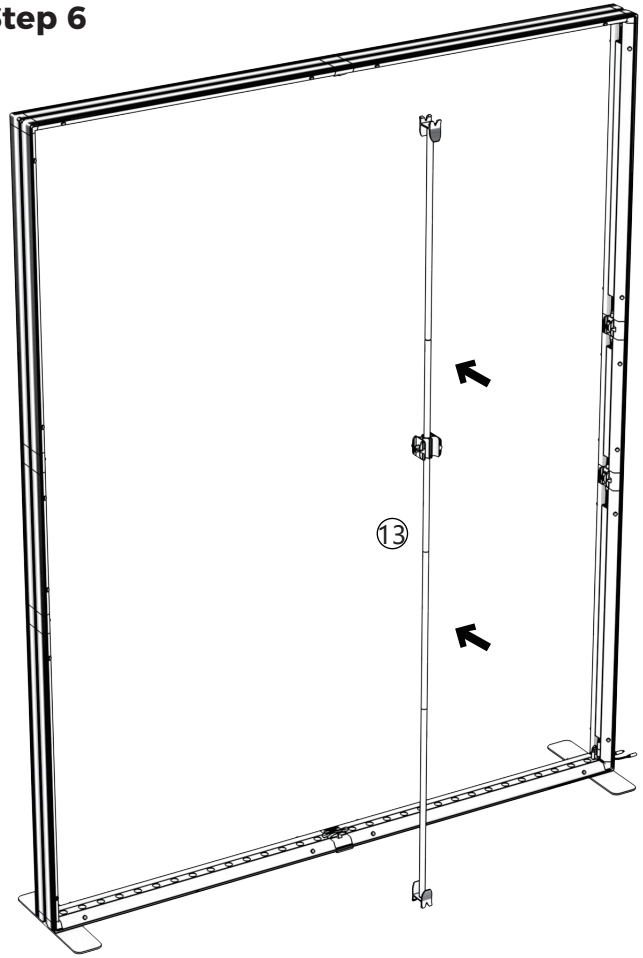

Step 7

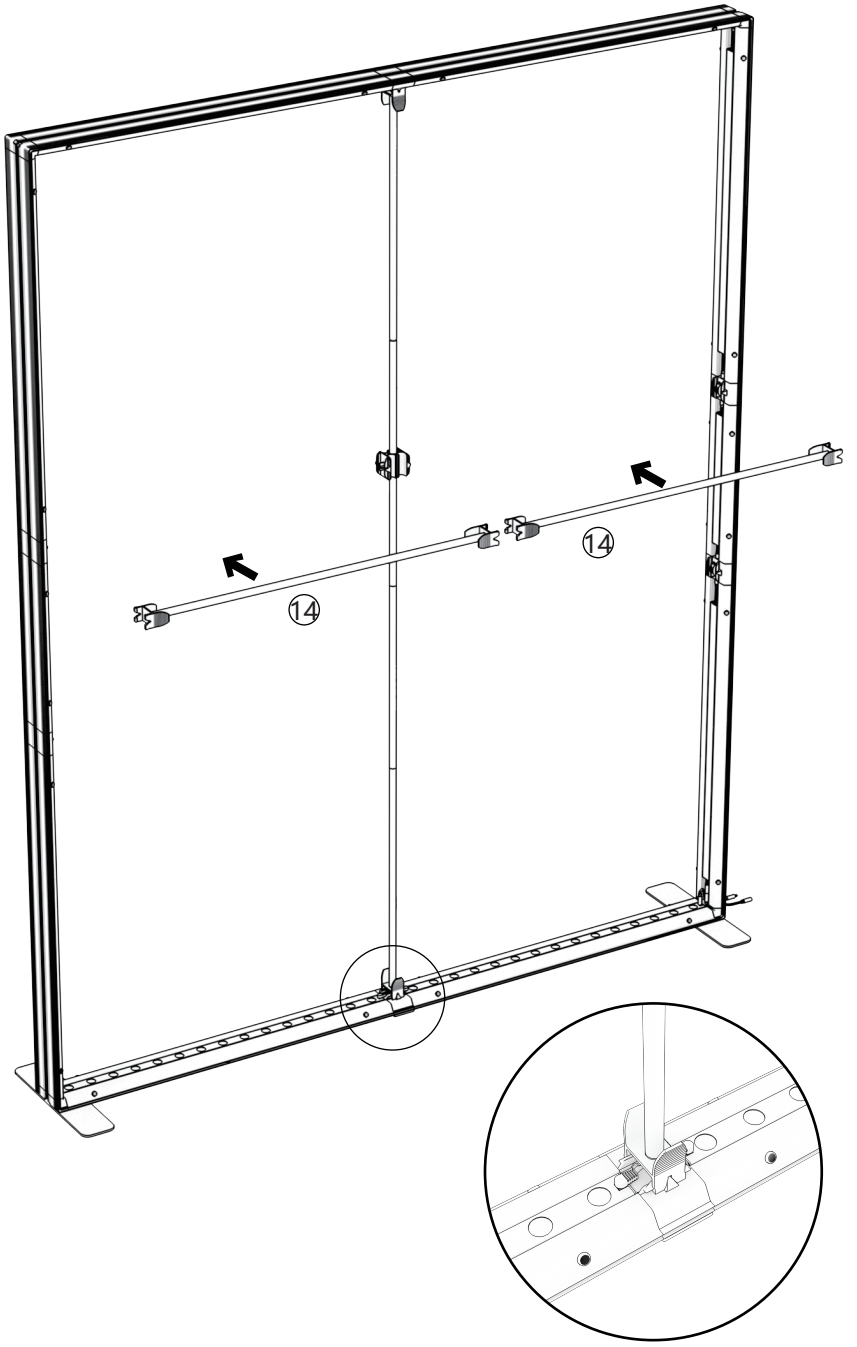

Step 8

