LED BOX PRO

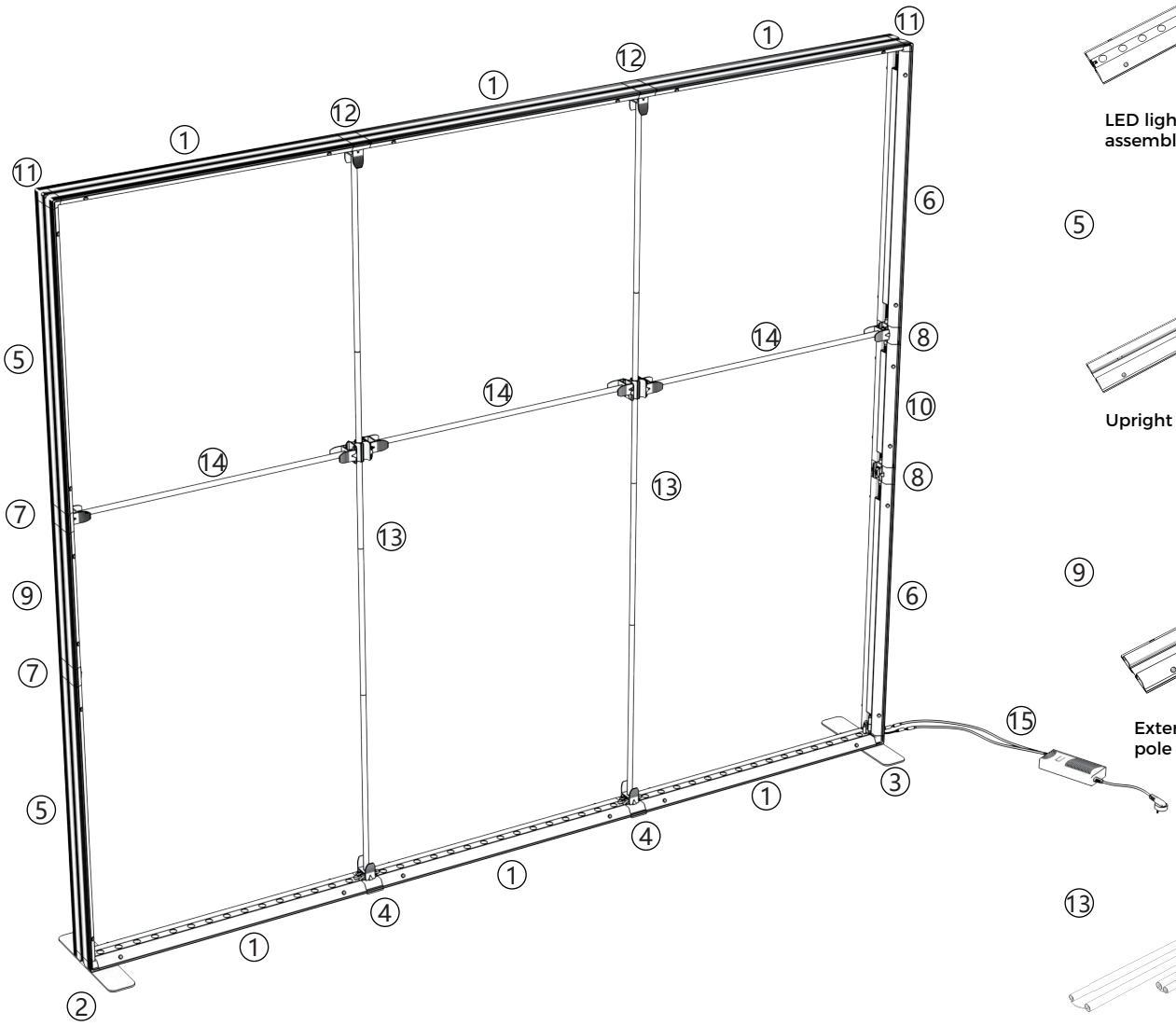

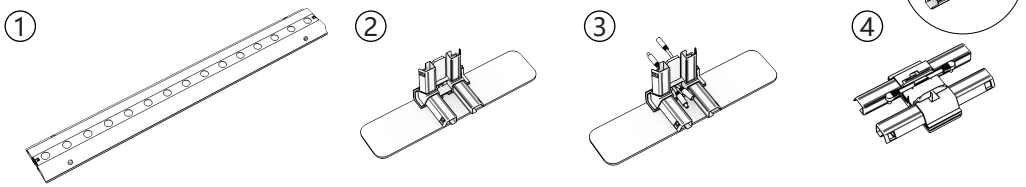

① LED light bar assembly x 6

② Base feet x 1

③ Base feet with DC lines x 1

④ Horizontal Middle connector with feet mat x 2

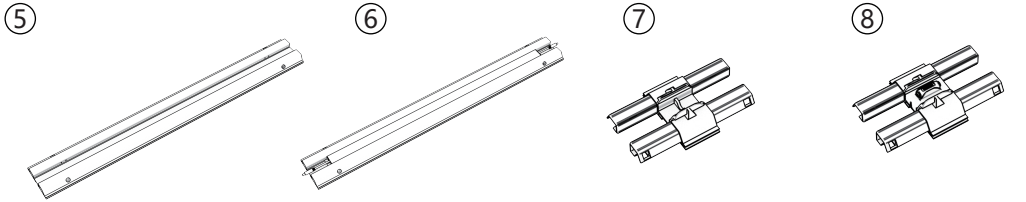

⑤ Upright assembly x 2

⑥ Power-side upright assembly x 2

⑦ Upright connector × 2

⑧ Power-side upright connector × 2

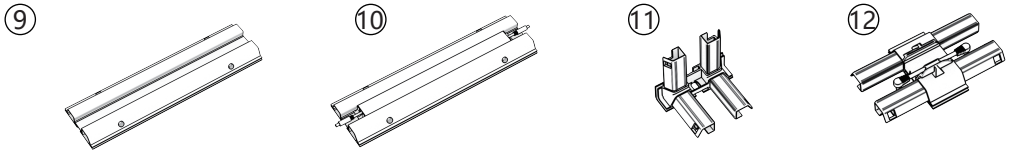

⑨ Extension pole assembly x 1

⑩ Power-side extension pole assembly x 1

⑪ Corner connector x 2

⑫ Horizontal Middle connector x 2

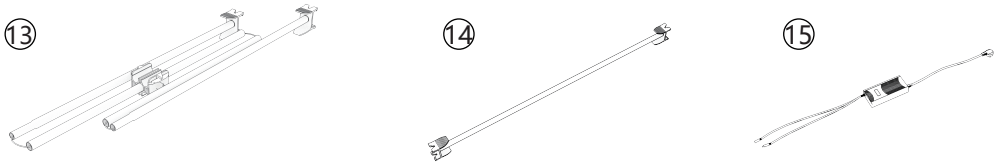

⑬ Vertical support bar assembly x 2

⑭ Horizontal support bar assembly x 3

⑮ Power cable x 1

Product size:3000*2500mm

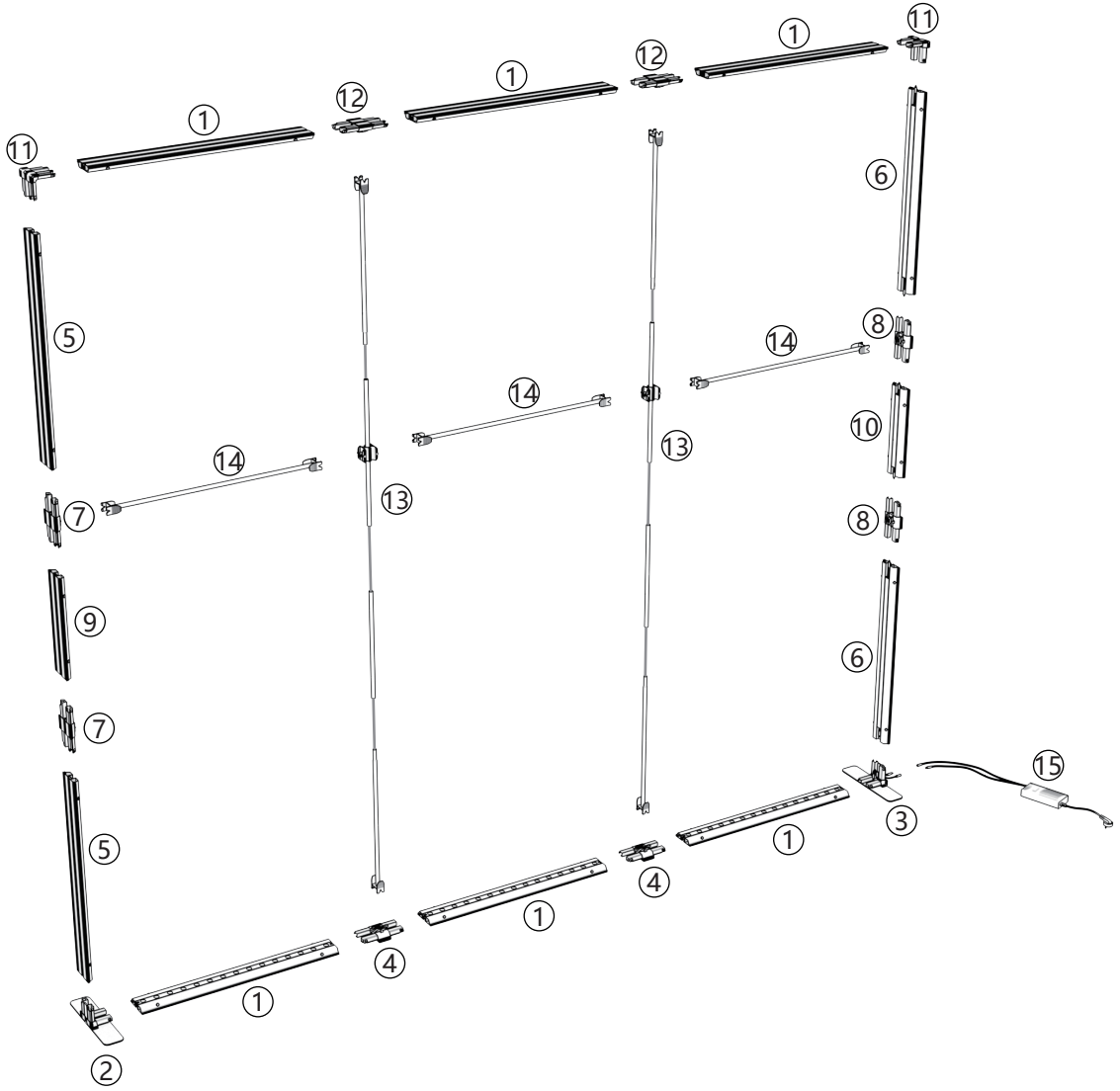

Step 1

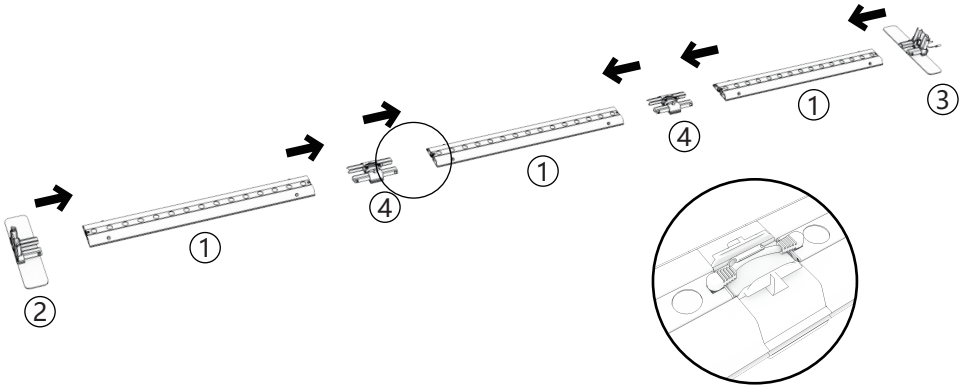

Step 2

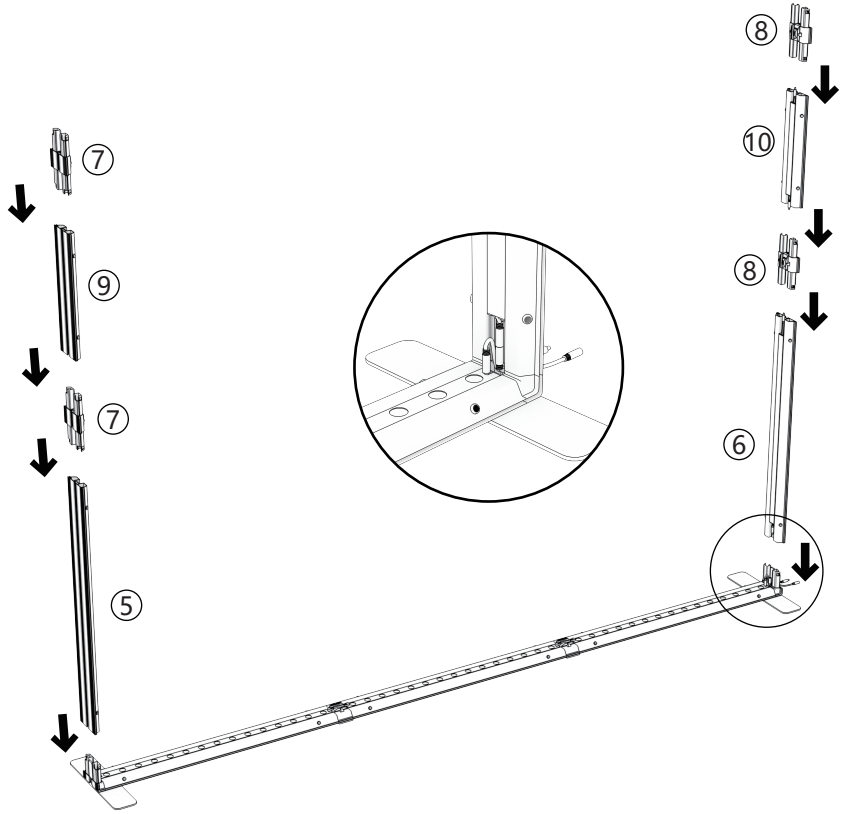

Step 3

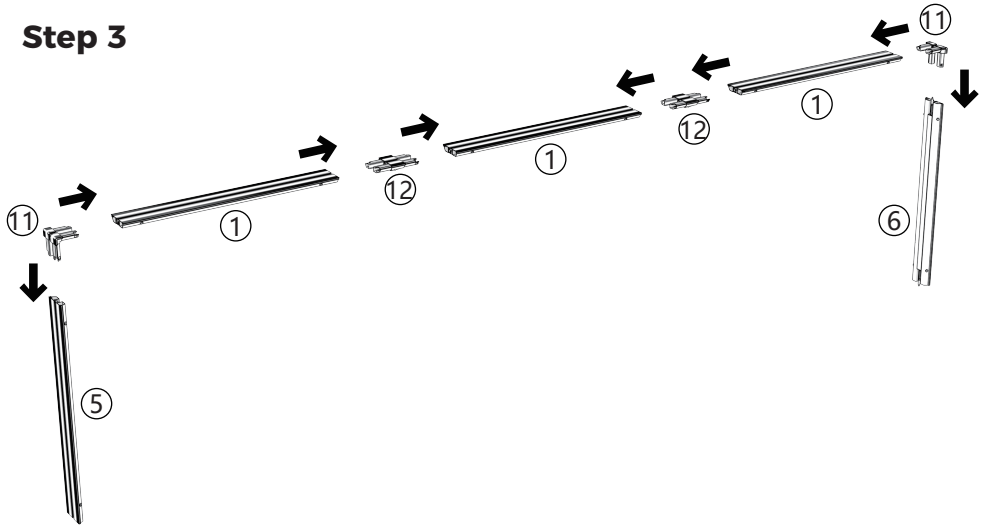

Step 4

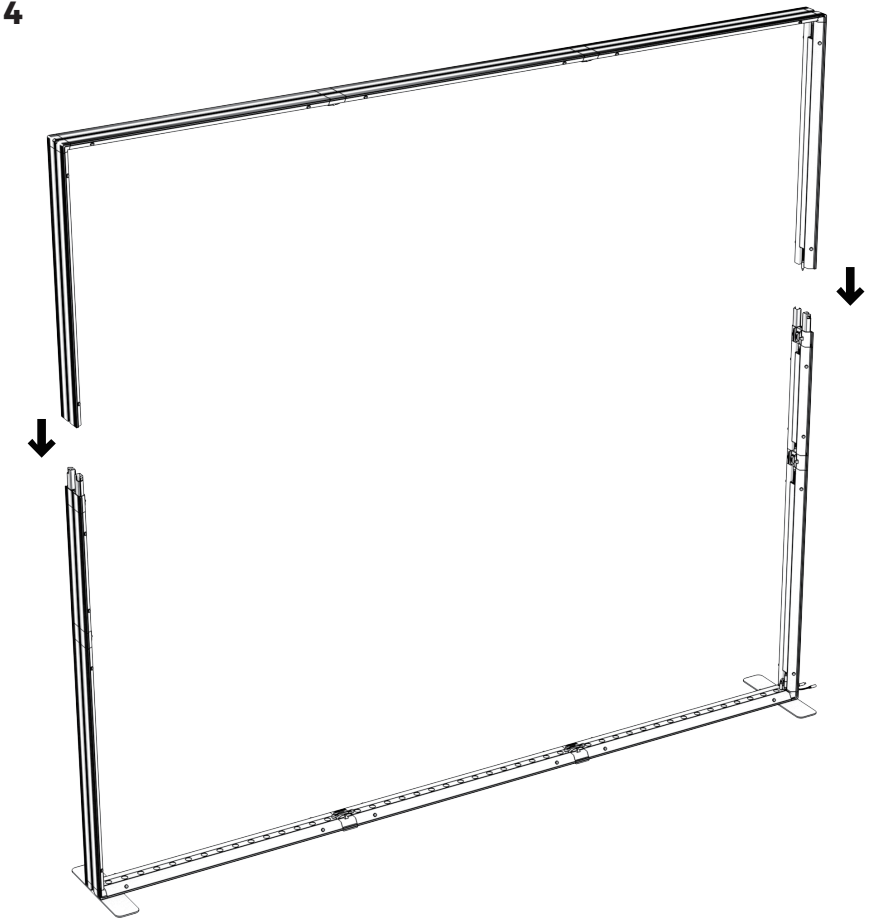

Step 5

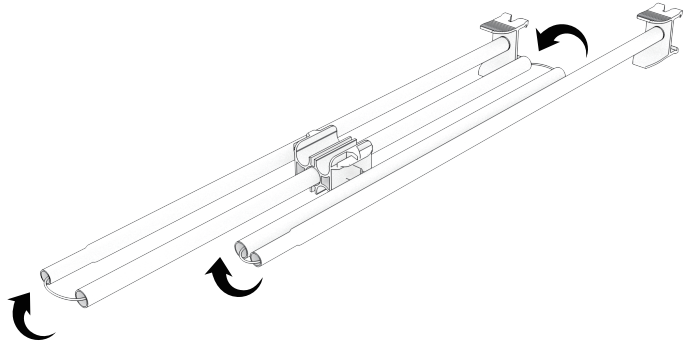

Step 6

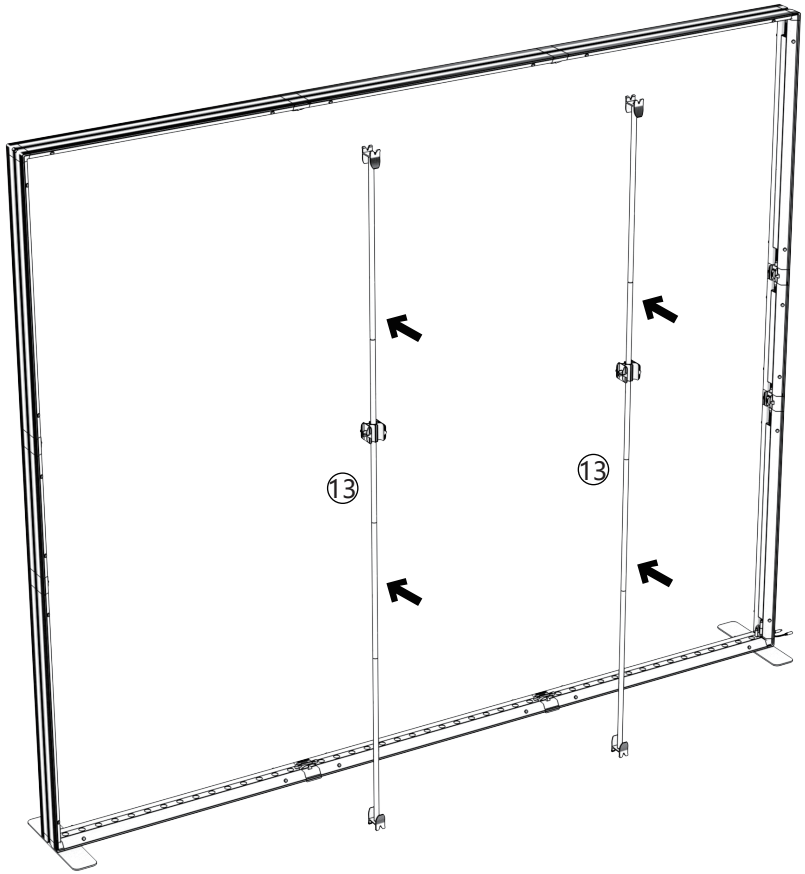

Step 7

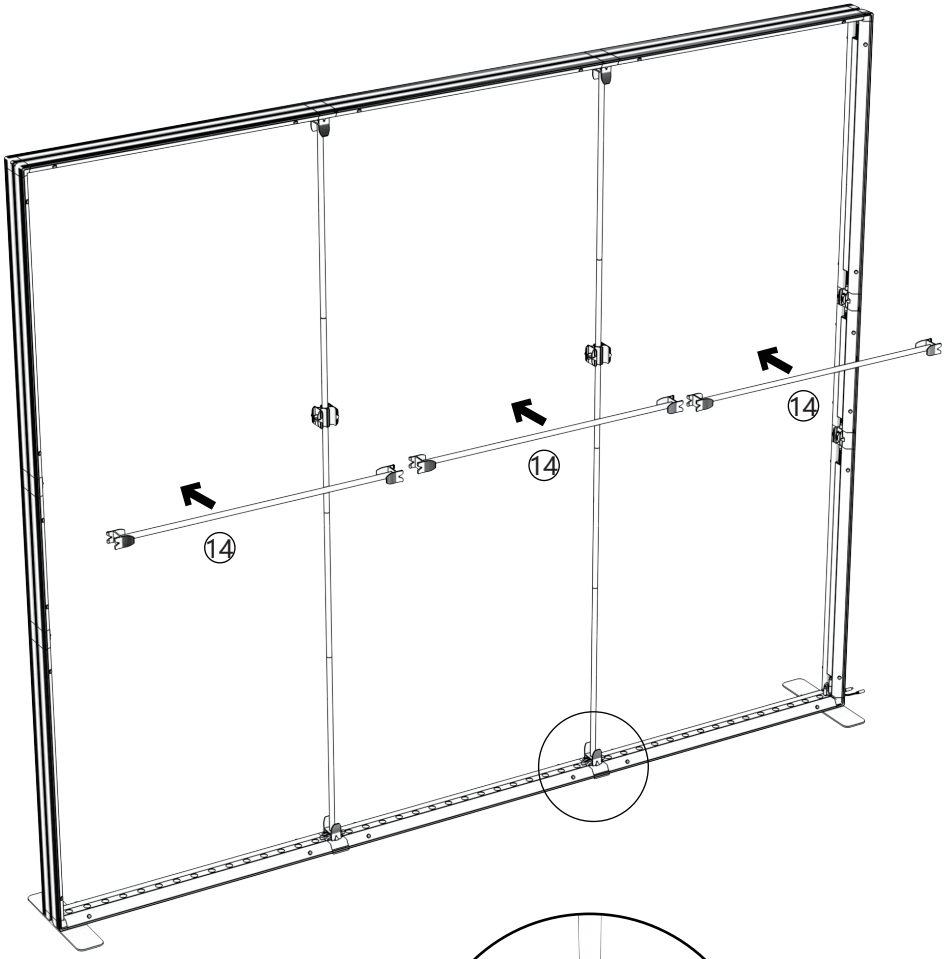

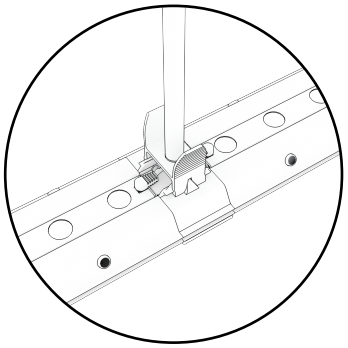

Step 8

