LED BOX PRO

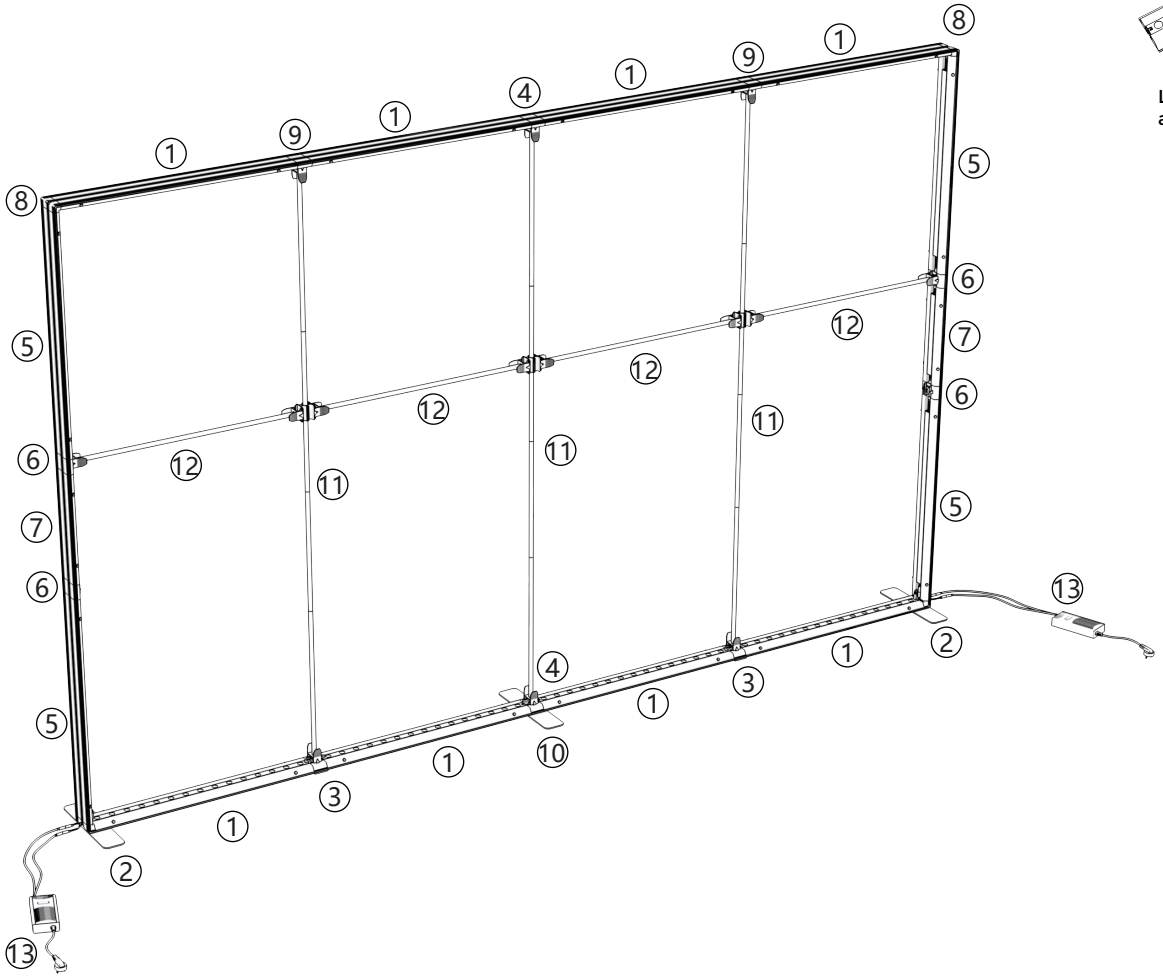

① LED light bar assembly x 8

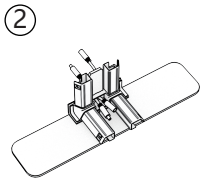

② Base feet with DC lines x 2

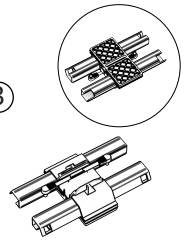

③ Horizontal Middle connector with feet mat x 2

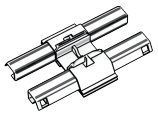

④ Horizontal Middle connector (without DC lines) x 2

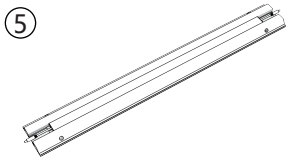

⑤ Power-side upright assembly x 4

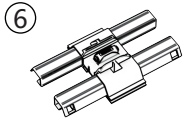

⑥ Power-side upright connector × 4

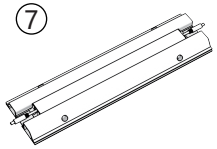

⑦ Power-side extension pole assembly x 2

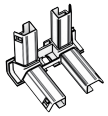

⑧ Corner connector x 2

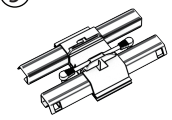

⑨ Horizontal Middle connector x 2

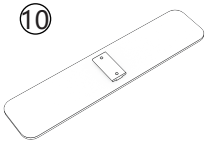

⑩ Feet mat x 1

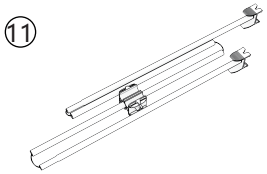

⑪ Vertical support bar assembly x 3

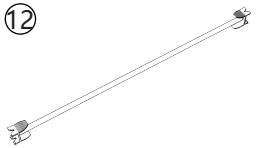

⑫ Horizontal support bar assembly x 4



⑬ Power cable x 2

Product size:4000*2500mm

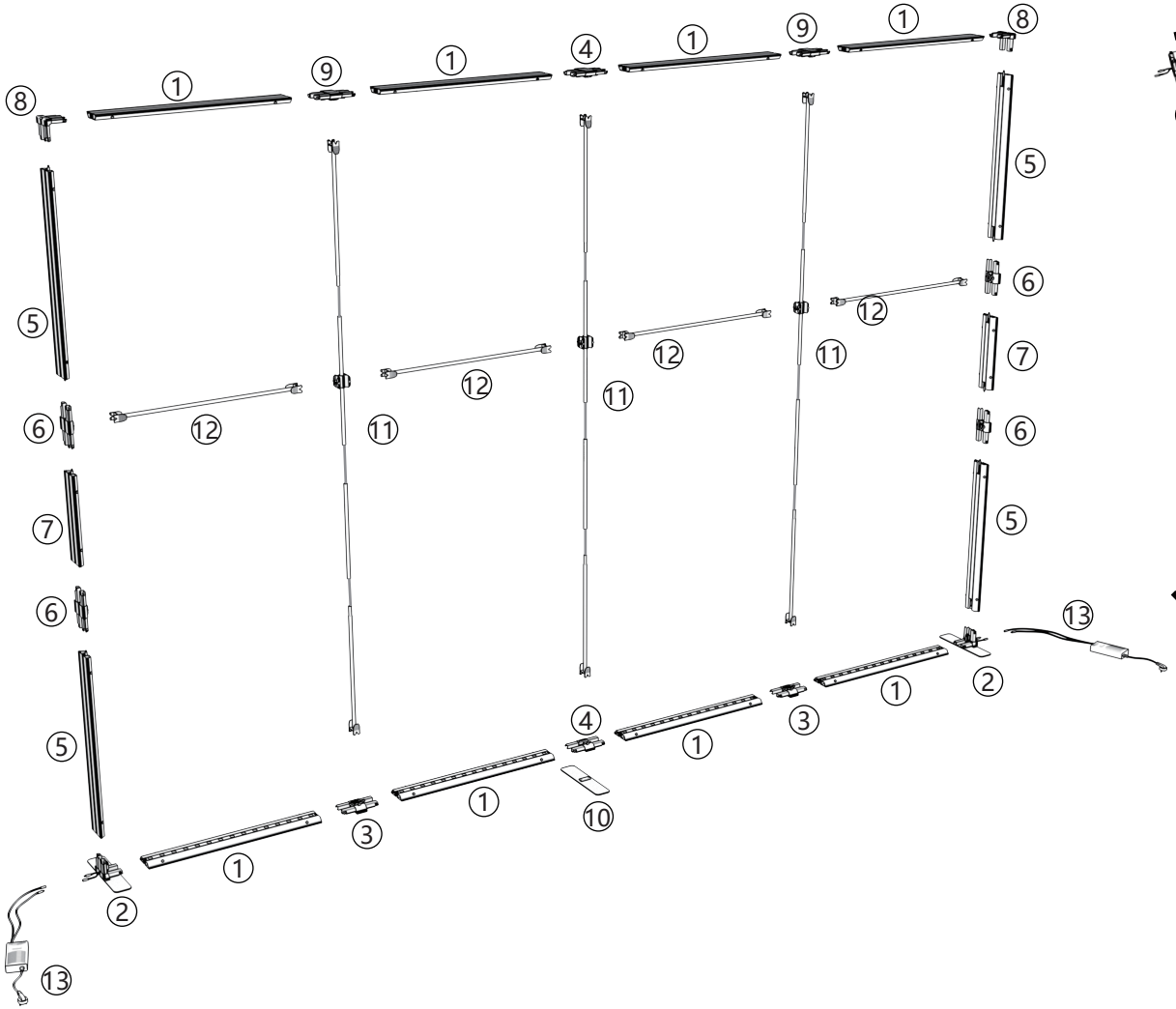
8
1
9
1
4
1
9
1
8
5
5
6
12
6
7
12
11
12
11
12
11
6
7
6
5
5
13
2
1
3
4
1
1
3
1
2
4
1
10
2
13

Step 1

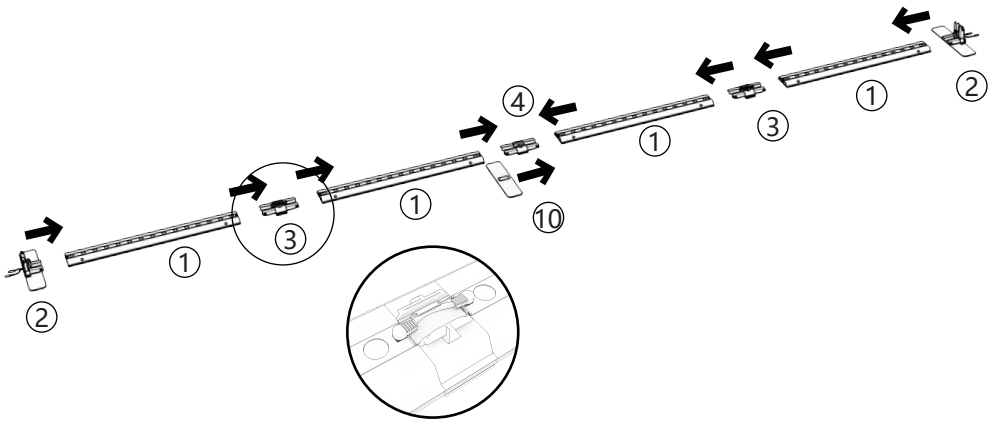
1
2
3
1
4
1
10
1
3
1
2

Step 2

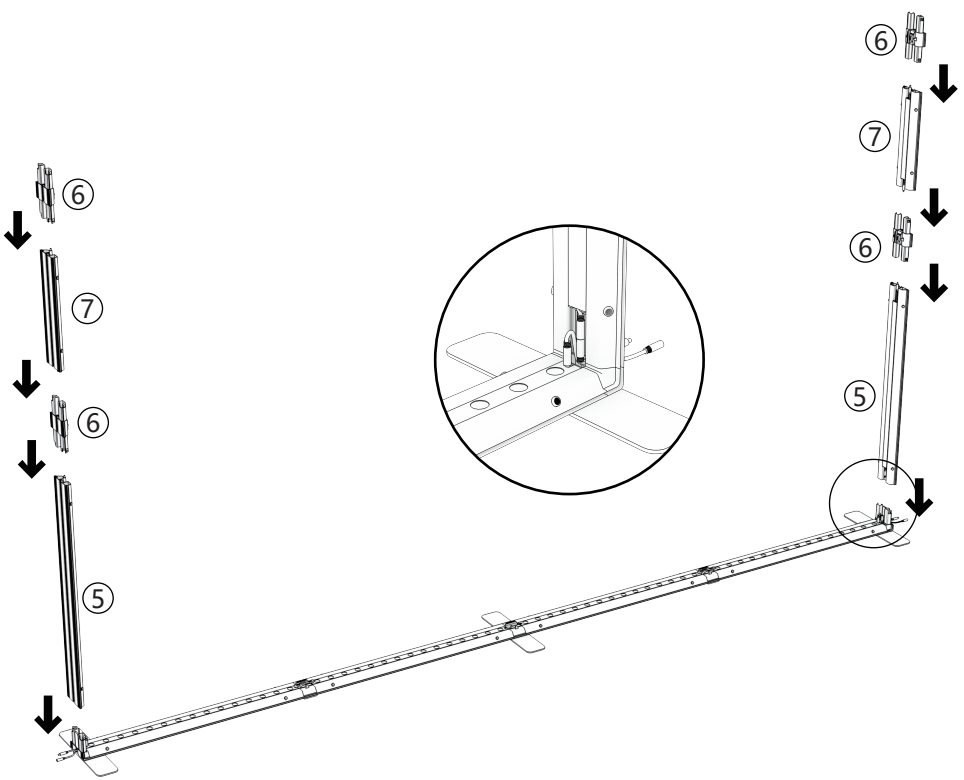
6
7
6
5
6
7
6
5

Step 3

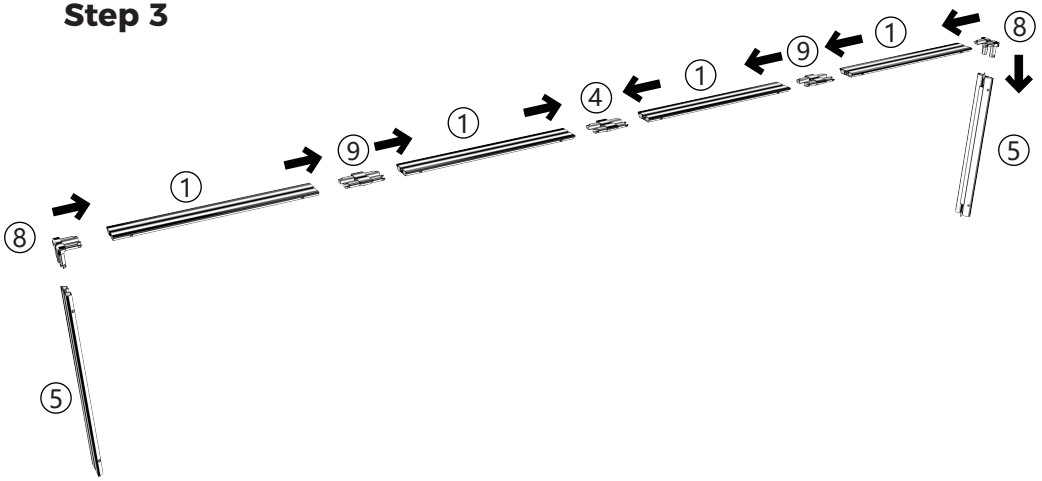

Step 5

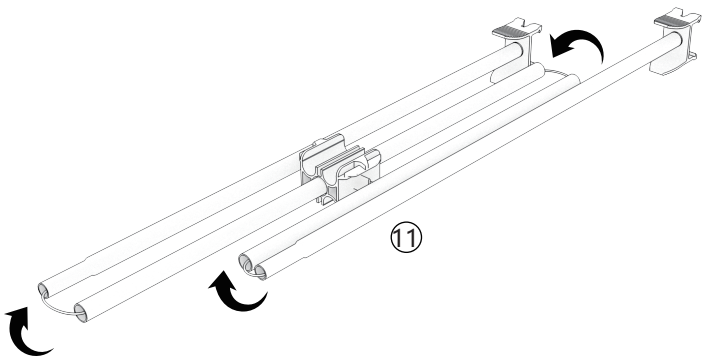

Step 4

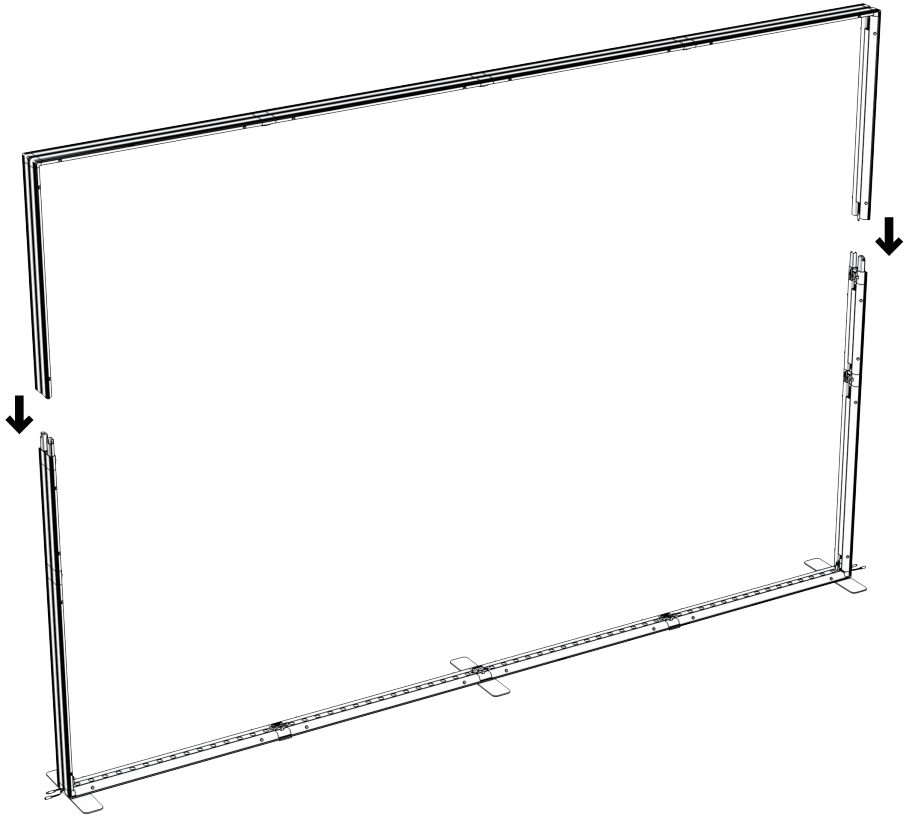

Step 6

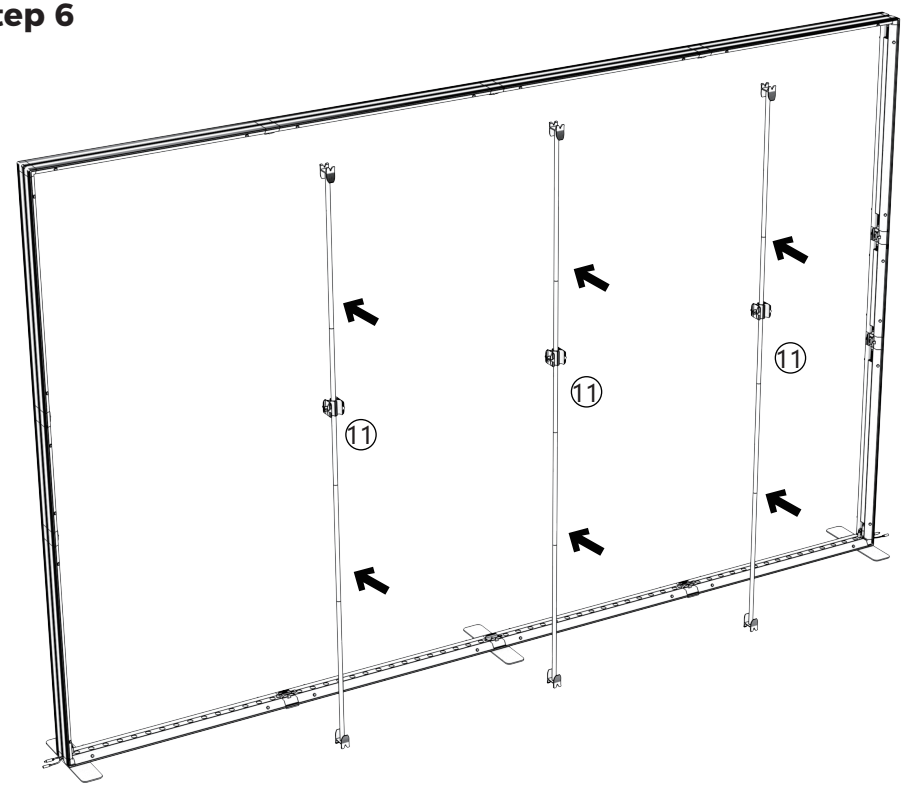

Step 7

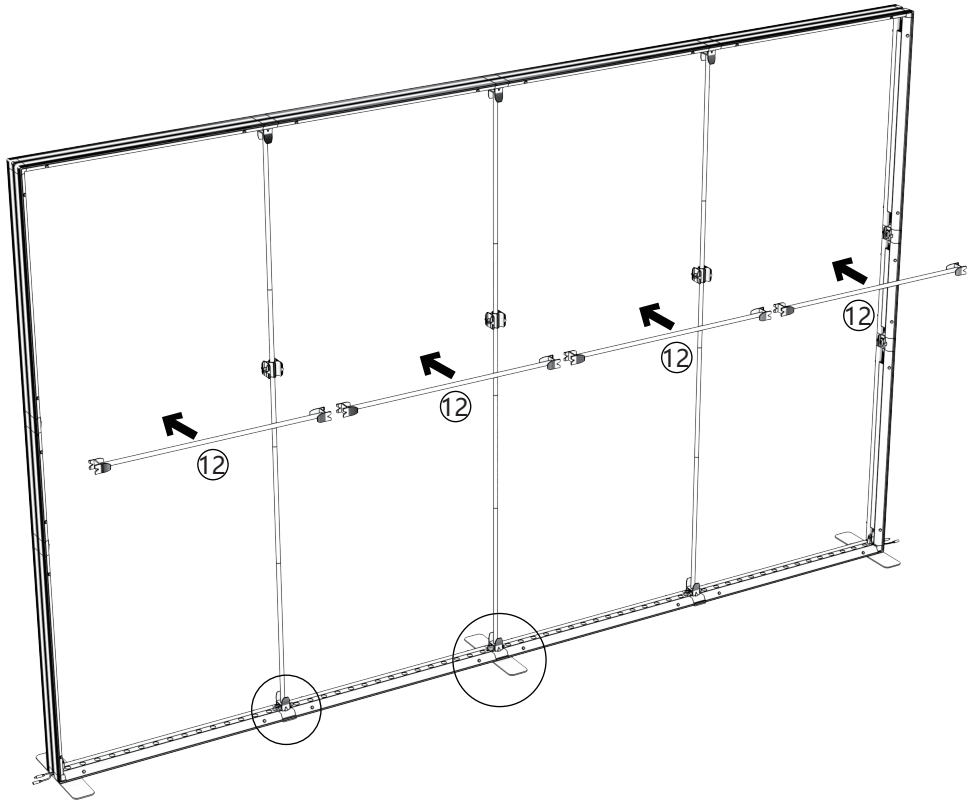

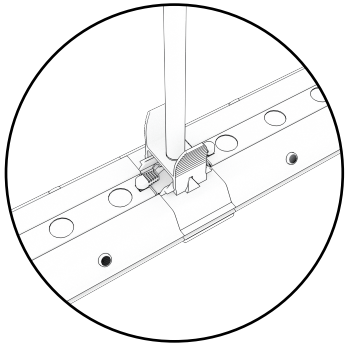

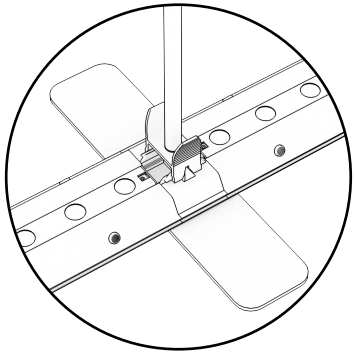

Step 8

